REV. LTR.	DATE	UPDATE DESCRIPTION	REMARK	SIGN	APPROVER

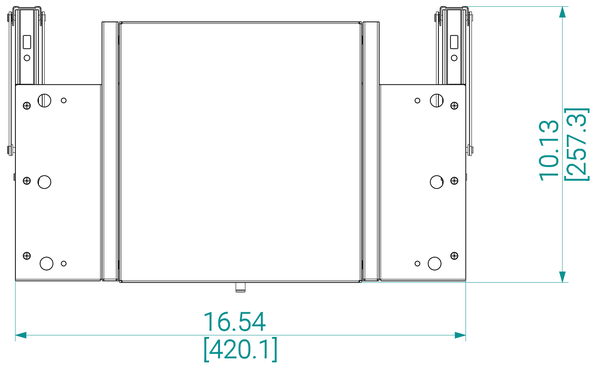

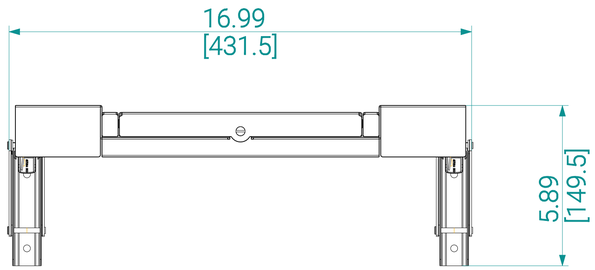

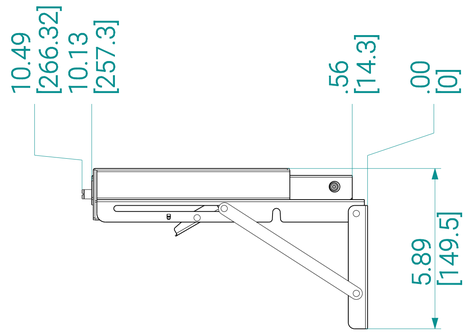

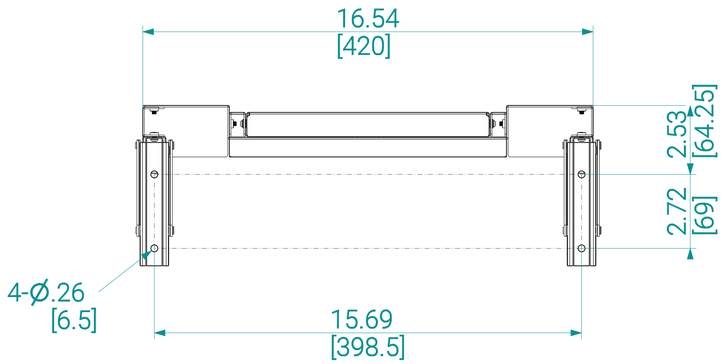

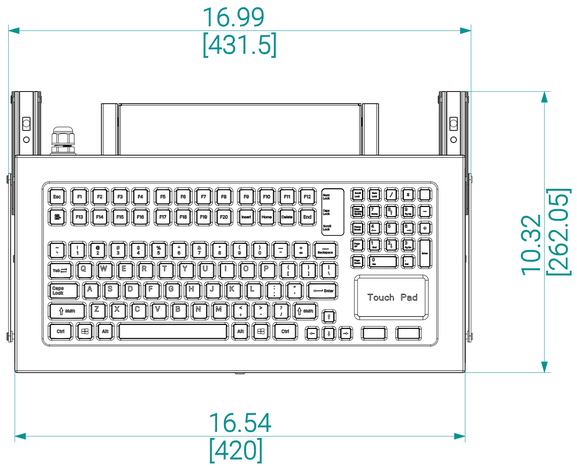

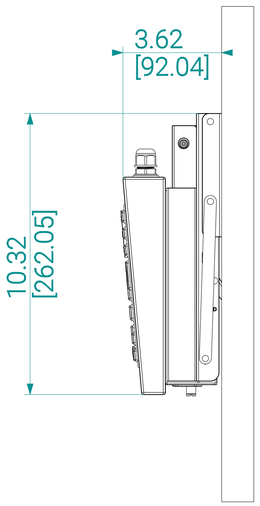

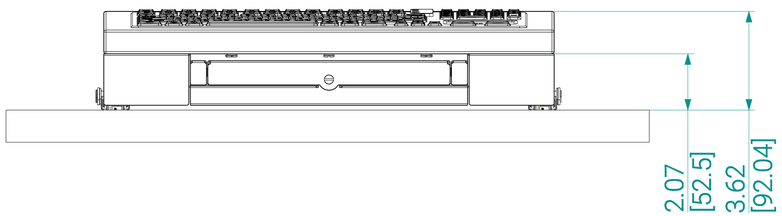

ARISTA CORPORATION	DESCRIPTION	UNIT	Dimension (W x H x D)
	XWM-KB-115-02	INCH/MM	16.99x5.89x10.13/431.5x149.5x257.3