REV. LTR.	DATE	UPDATE DESCRIPTION	REMARK	SIGN	APPROVER

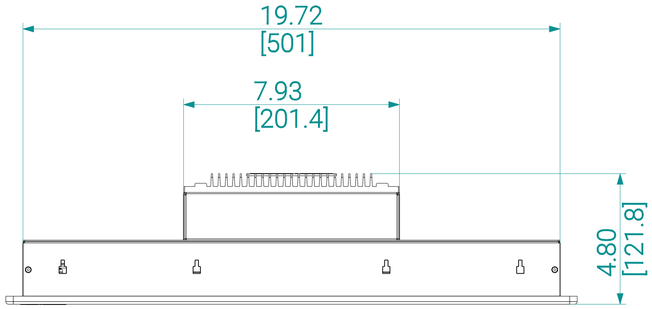

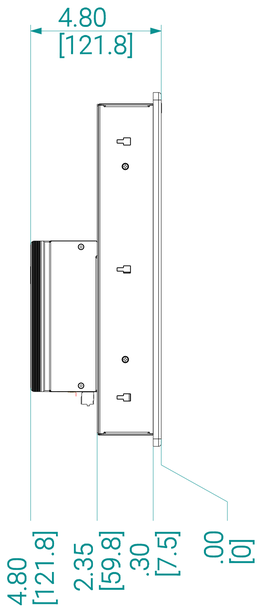

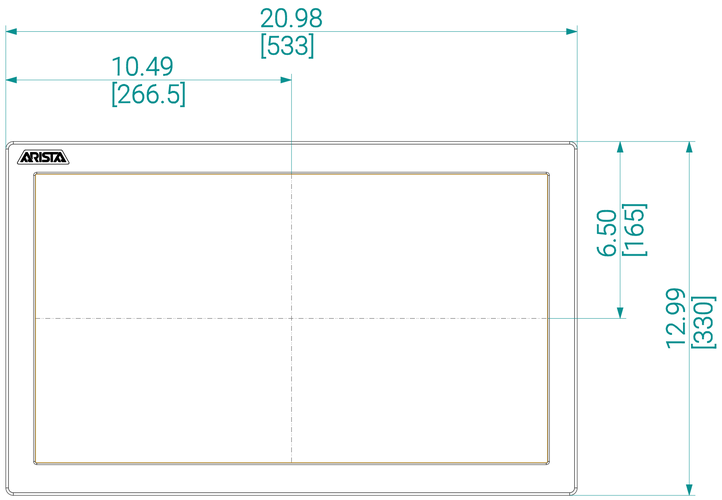

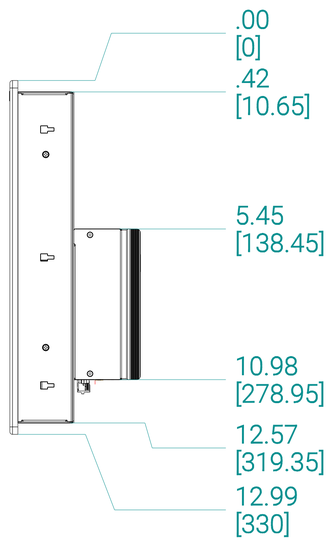

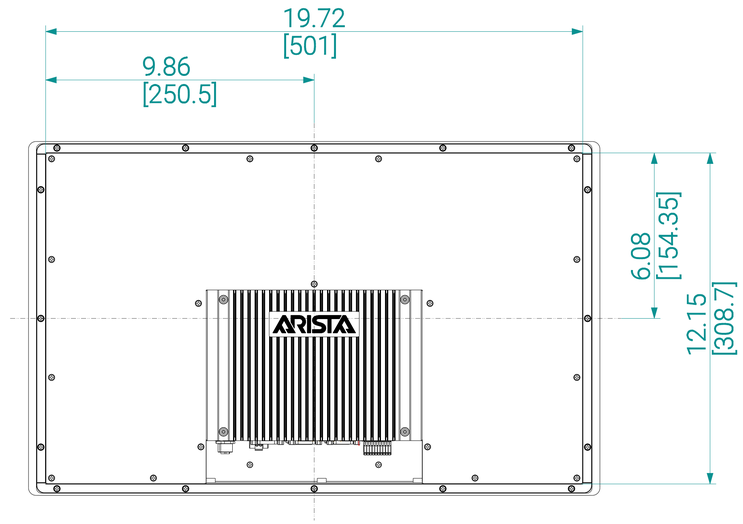

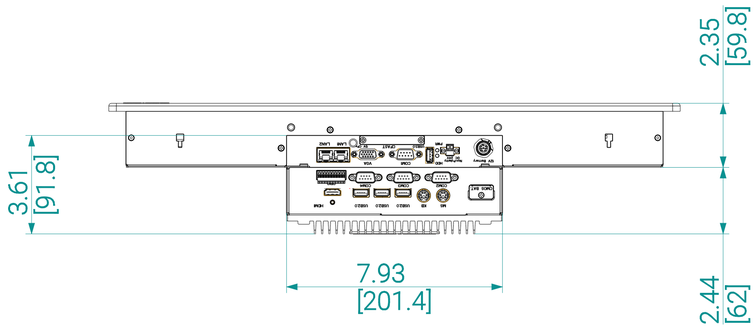

ARISTA CORPORATION	DESCRIPTION	UNIT	Dimension (W x H x D)
	ARP-3621AP-E01	INCH/MM	20.98X12.99X4.8/533X330X121.8