REV. LTR.	DATE	UPDATE DESCRIPTION	REMARK	SIGN	APPROVER

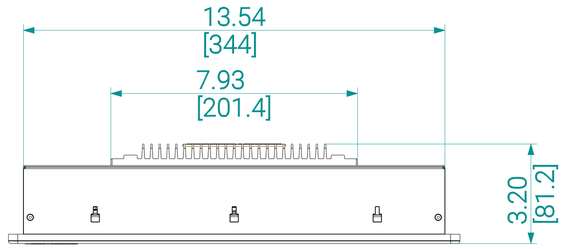

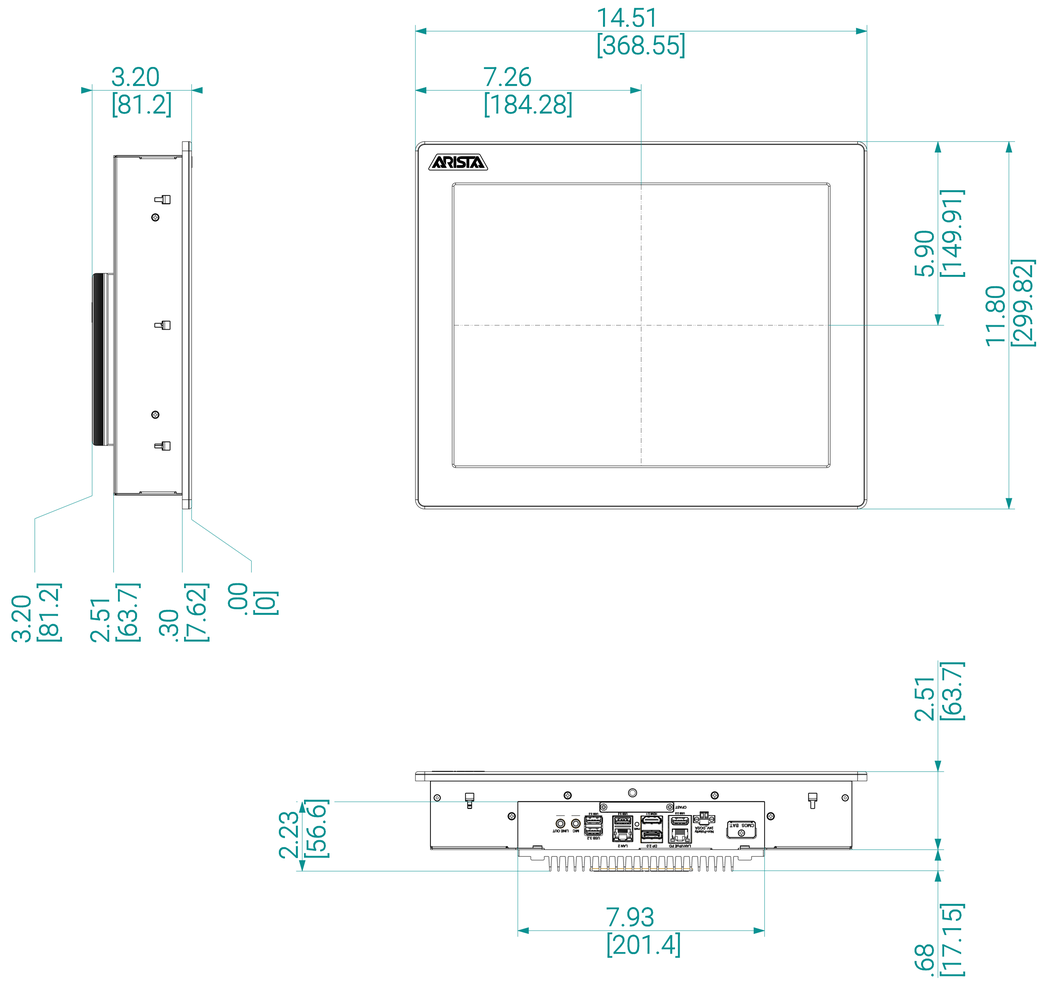

ARISTA CORPORATION	DESCRIPTION	UNIT	Dimension (W x H x D)
	ARP-3615AP-K01	INCH/MM	14.51x11.8x3.2/368.55x299.82x81.2